DIAMANT-KERNBOHRMASCHINE TYP HD 16/18
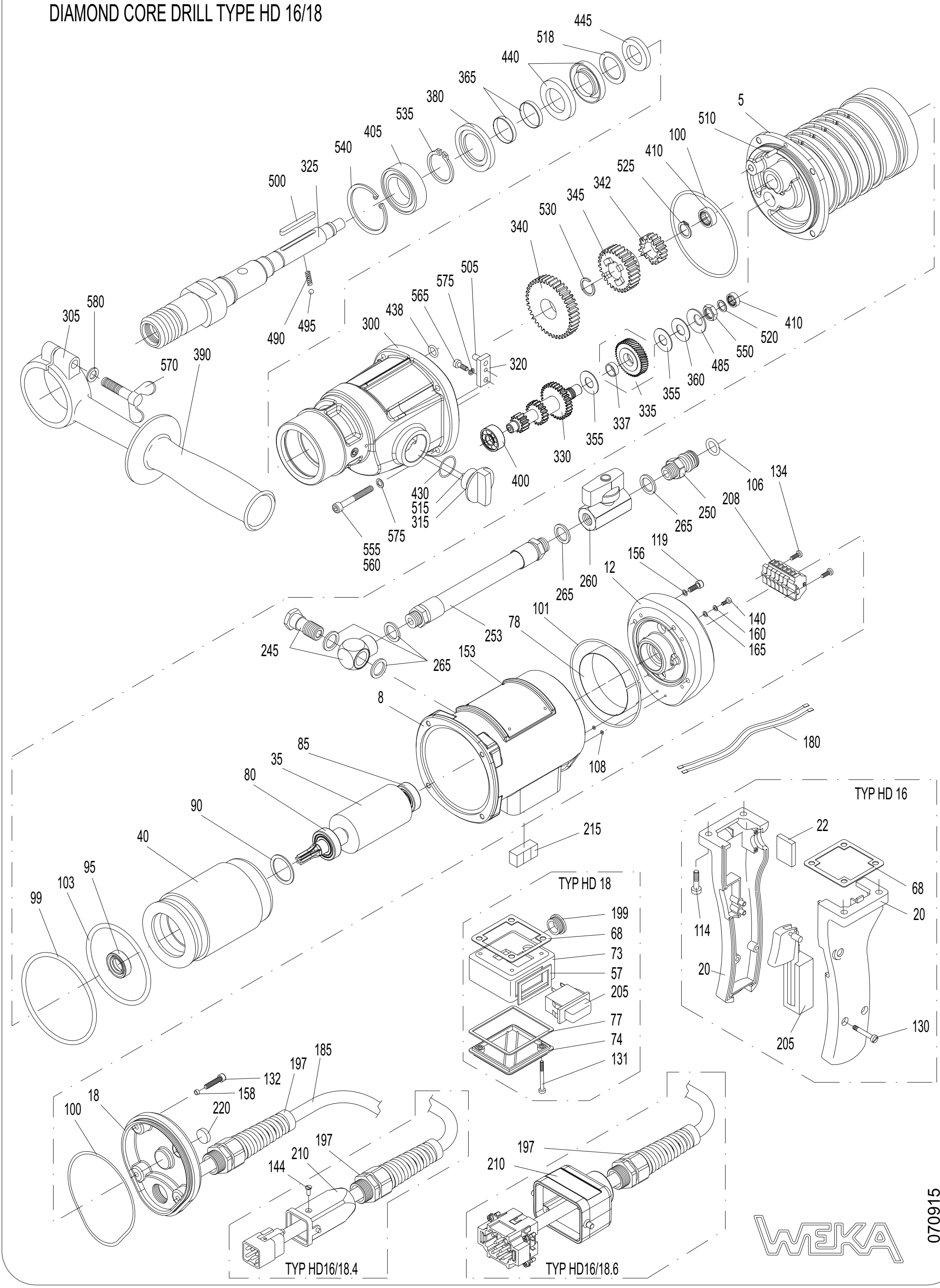
DIAMOND CORE DRILL TYPE HD 16/18