DIAMANT - KERNBOHRMASCHINE TYP SR 68
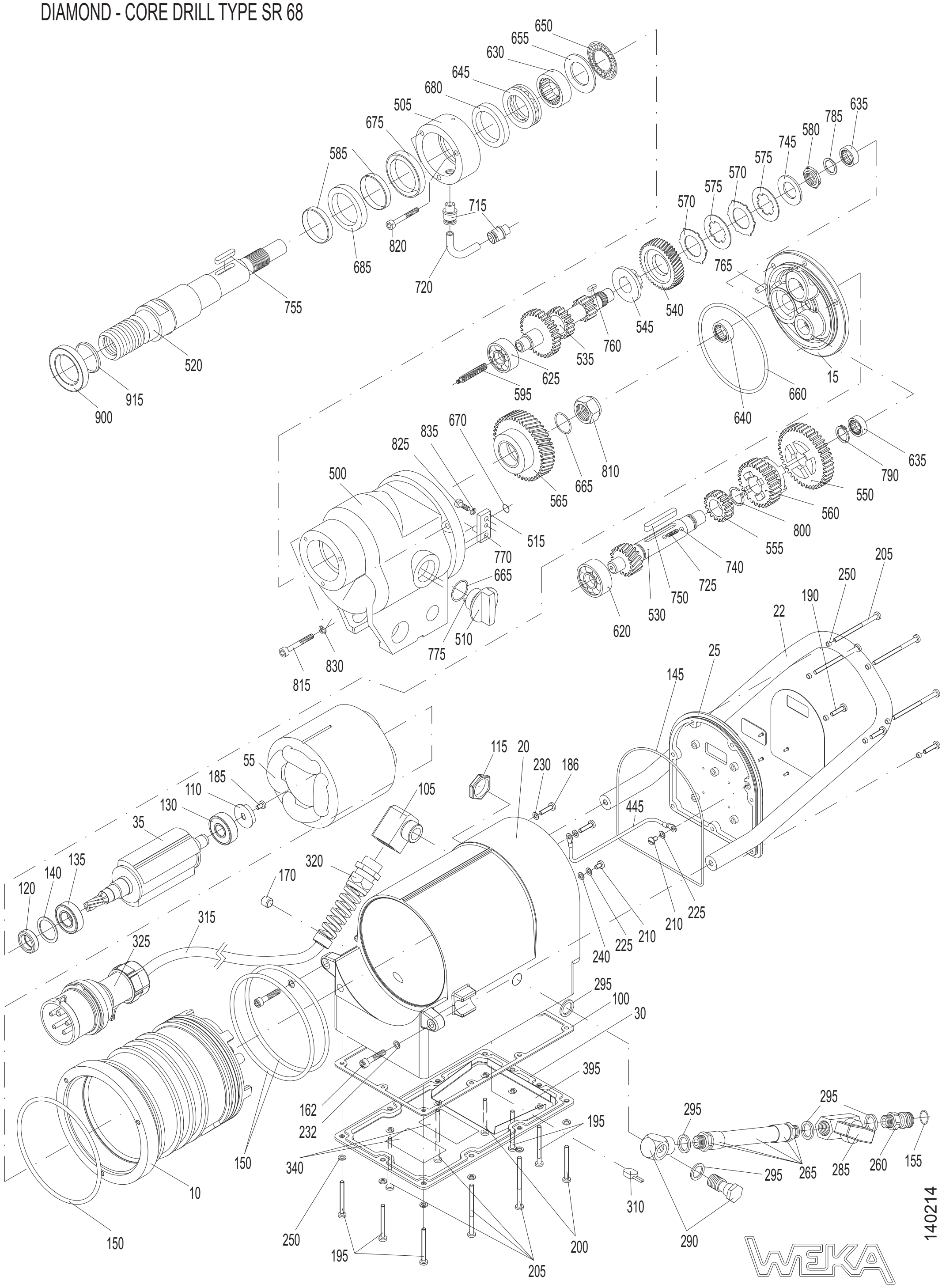
DIAMOND - CORE DRILL TYPE SR 68